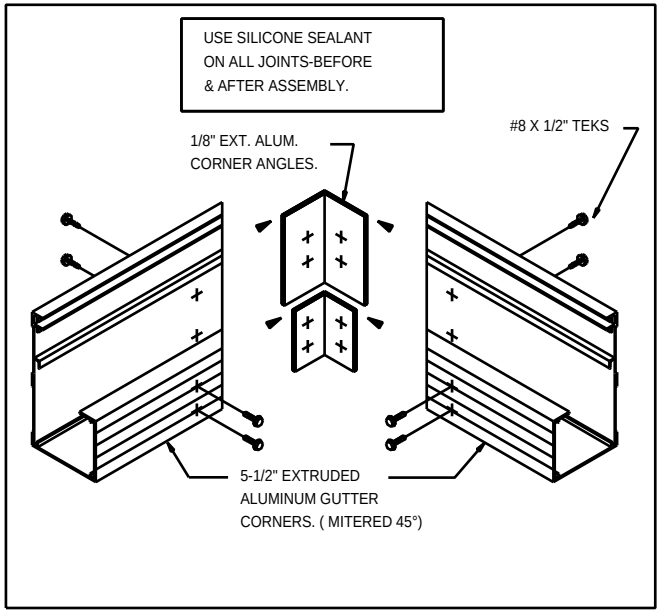

CORNER ASSEMBLY

(FASCIA / GUTTER)

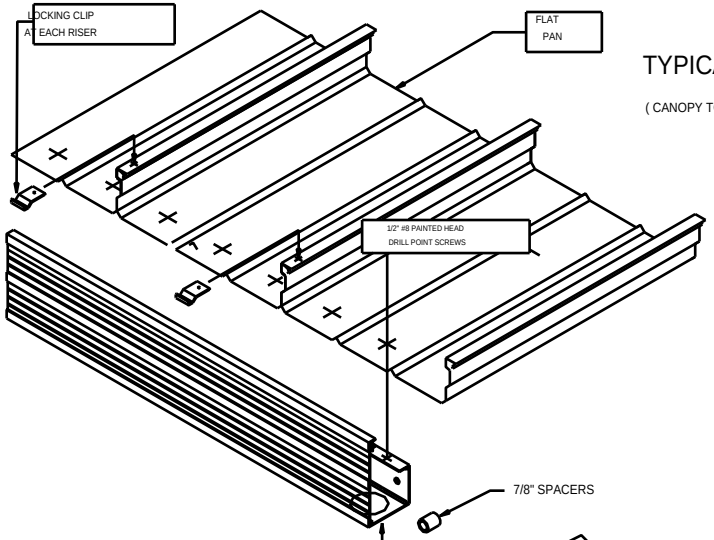

TYPICAL ASSEMBLY

(CANOPY TOP)

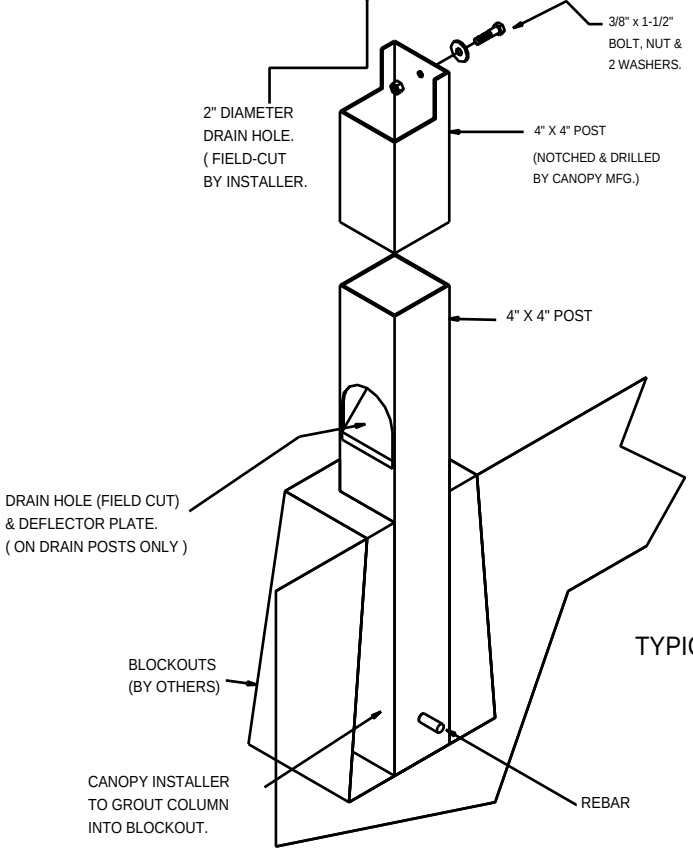

TYPICAL FOOTING

SUPERIOR METAL PRODUCTS CO., INC.

BIRMINGHAM, AL. 35209

CANOPY DETAIL POST UNDER GUTTER