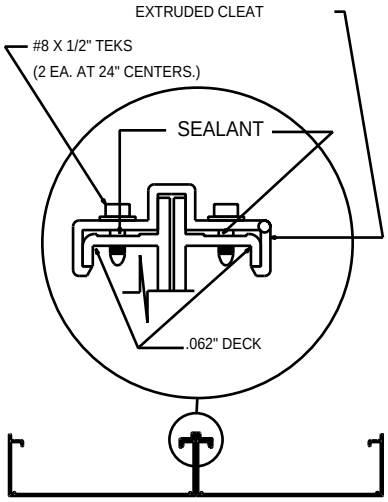

FLUSH DECK ASSEMBLY

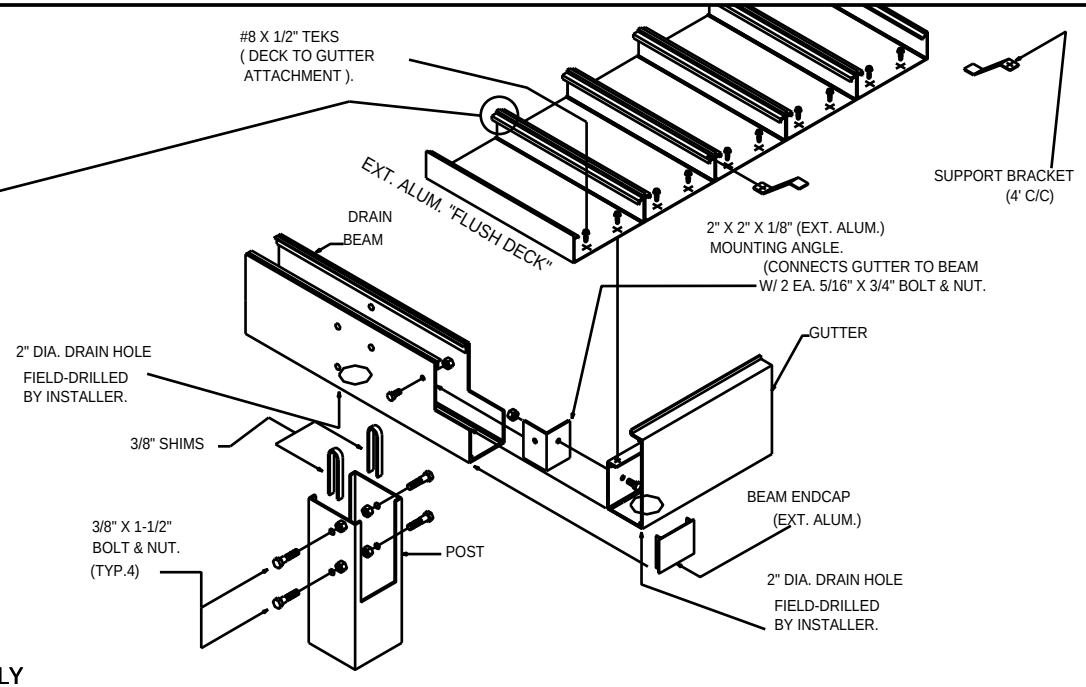

TYPICAL ASSEMBLY

(CANOPY TOP)

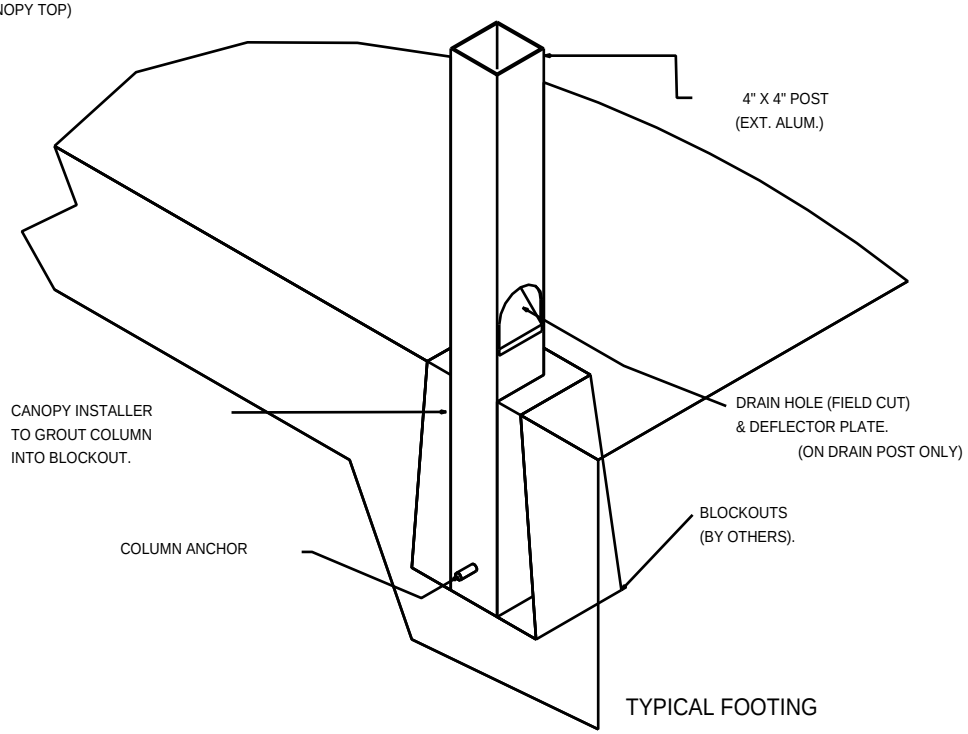

TYPICAL FOOTING

SUPERIOR METAL PRODUCTS CO., INC.

BIRMINGHAM, AL. 35209

EXTRUDED CANOPY DETAIL WITH FLUSH DECK & OVERHANG