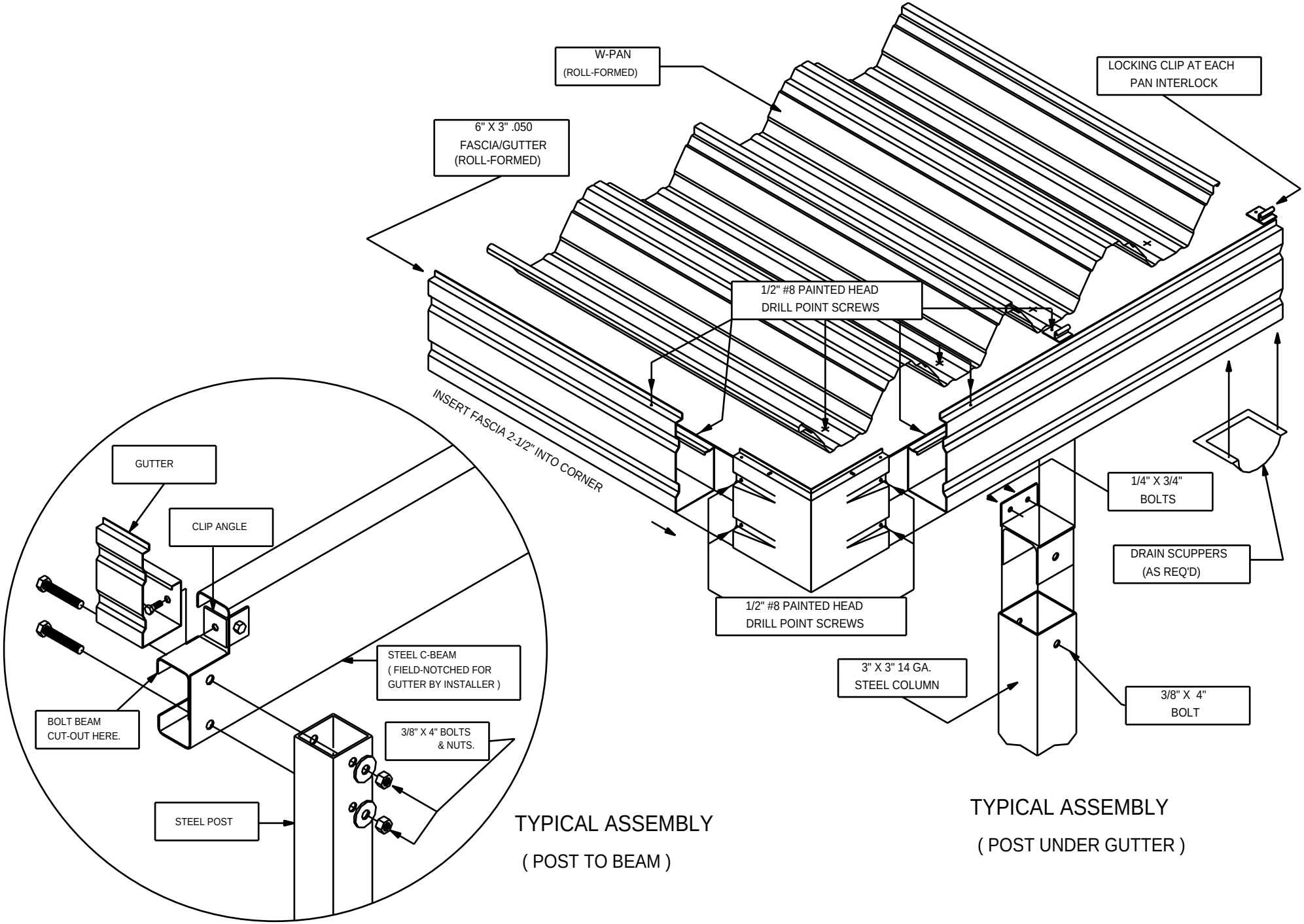

SUPERIOR METAL PRODUCTS CO., INC.
BIRMINGHAM, AL. 35209

TYPICAL ROLLFORMED CANOPY